installation instructions
cassette/pit lift Aqua-Out

an patented product

Mount Pump and Regulator:

1. Mount the pump (detail 8, page 3) with two 8-32 pan head machine screws, lock washers and nuts in mounting holes “A”.
2. Screw the pressure gage into the filter regulator using Teflon pipe tape. The gage goes in the port so that the flow direction is left to right (look at the arrow head on the face of the regulator). Make sure the port opposite the gage is plugged.
3. Mount the filter regulator (detail 10, page 3) with two 8-32 socket head cap screws, lock washers and nuts in mounting holes “B”.
4. Screw two 1/4” hose barbs into the filter regulator using Teflon pipe tape.
5. Cut a six inch long piece of 1/4” air hose and connect the outlet of the filter regulator to the “GAS IN” port of the pump.

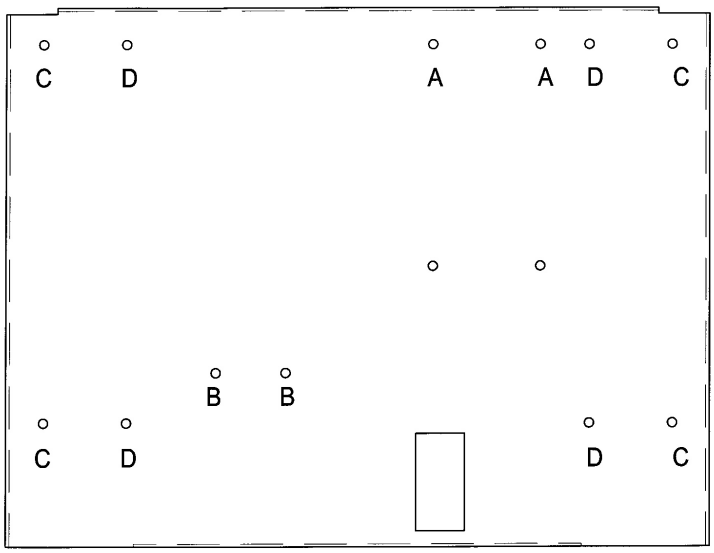

Open:

Remove the center cover plate from the cassette lift.

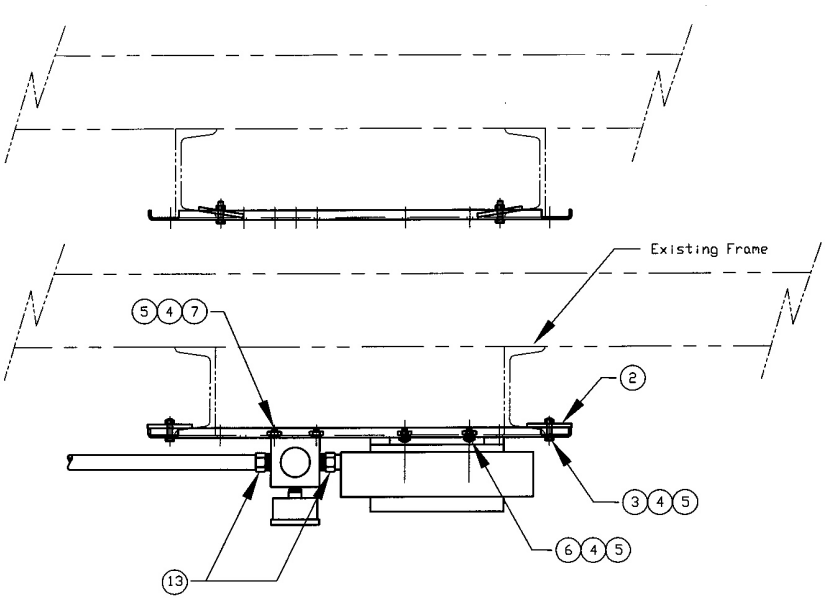

Look:

The pump package panel mounts on the side of the lift without (opposite) the coiled air hose.

To clamp the pump package panel to two vertical channels of the cassette lift frame, first determine if the flanges of the channels face inward, outward, or are facing in the same direction (see drawing left).

Prepare:

Preload the strap clamps and screws in the four outer mounting holes marked “C” on the first page drawing if the flanges face outward; in the inner mounting holes marked “D” if the flanges face inward. If the flanges face in the same direction, install an extra set of screws and nuts as stops in the outer mounting holes for the channel that faces inward. Then preload the strap clamps and screws in the inner mounting holes for that channel and in the outer mounting holes for the second channel.

SVI International, Inc. • Toll Free: 800-321-8173 or 815-748-0200 • Fax: 800-899-1784

Install the Panel:

1. Position the panel against the channel so the top flange of the panel rests against the top of the vertical channels (see drawing on next page).
2. Clamp the panel to the channels using the strap clamps.

Install the Compressed Air Supply:

1. Unscrew the coiled air hose fitting from the coupling welded to the lift's frame.
2. Screw the 1/4 NPT Tee with the hose barb fitting into the coupling using Teflon tape.
3. Screw the coiled air hose fitting into the end of the coupling using Teflon tape.
4. Push one end of the 1/4" hose on to the filter/ regulator supply side hose barb; measure how much hose is needed to reach the 1/4 NPT Tee; trim the hose; slip two hose clamps over the 1/4" air hose; push the hose on the second hose barb fitting; clamp the hose with the hose clamps over both hose barbs.

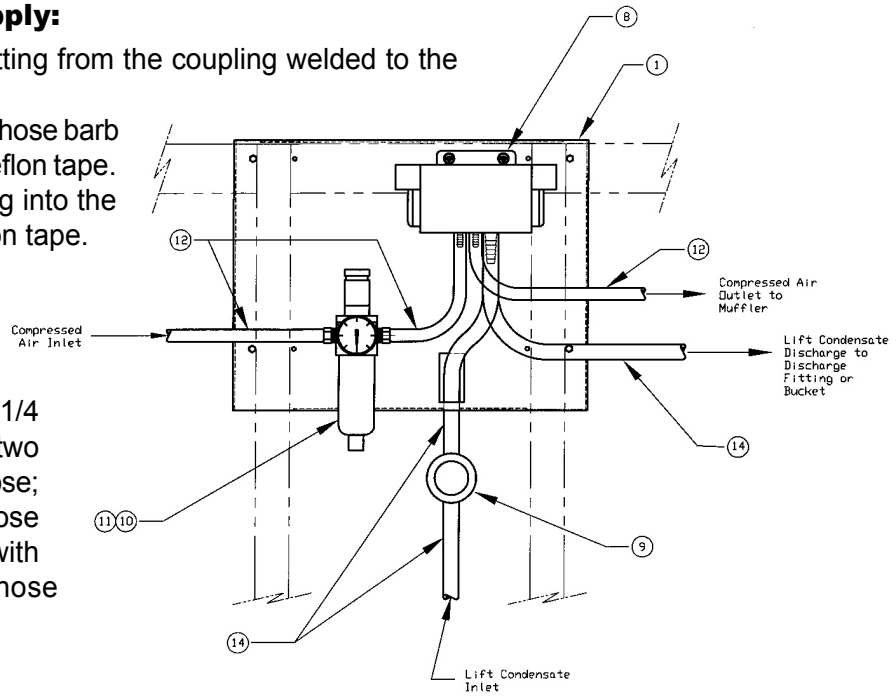

Install the Pump Inlet Hose:

1. Cut one end of the 3/8" hose on a 30° angle and punch or drill a small hole through the hose so you can push the hitch pin though the hose.
2. Slip the ballast weight on the hose and push the hitch pin through the hose so it stops the ballast weight from coming off the hose.
3. Lower 3/8" hose end with ballast weight down behind the installed panel until the end reaches the bottom of the lift containment shell.
4. Feed the other end of the 3/8" hose through the rectangular hole in the panel. This holds the hose against the side of the shell, out of the way of the equalizer beam.
5. Cut the hose leaving about 12 inches extending in front of the hole in the panel.

DET.	QTY.	PART NO.	DESCRIPTION
19	1	BH-9786-25-10	Hitch Pin
18	1	BH-9786-25-09	Sump Line Wt.
17	2	BH-9786-25-08	Hose Clamp - 7/32 to 5/8"
16	1	BH-9786-25-07	Nipple - 1/4 NPT Close
15	1	BH-9786-25-06	Galv. Pipe Tee - 1/4 NPT
14	30	BH-9786-25-05	Air Hose 3/8" - (FT.)
13	3	BH-9786-25-04	1/4 NPT Push-On Hose Barb
12	16	BH-9786-25-03	Air Hose 1/4" - (FT.)
11	1	BH-7070A-11	Pressure Gage
10	1	BH-7070A-09	Filter Regulator
9	1	BH-9786-27	Pump Strainer
8	1	BH-9786-26	Diaphragm Pump
7	2	F-SC-0008-32-1562	8-32 UNC x 1-9/16 SHCS
6	2	F-PH-0008-32-0375	8-32 UNC x 3/8 Truss HMS
5	10	F-NL-0008-32	8-32 UNC Hex Nut
4	10	F-LW-0008	No. 8 Lock Washer
3	6	F-HC-0008-32-0625	8-32 UNC x 5/8 HHCS
2	4	BH-9786-25-02	Strap Clamp
1	1	BH-9786-25-01	Mounting Plate

6. Insert inlet hose barb of the Pump Strainer into the hose (with the flow arrow on the side of the strainer pointing away from the hose).
7. Push another piece of 3/8” hose on the Pump Strainer outlet hose barb.
8. Trim the hose so you have enough hose to reach the pump inlet (approximately 10 inches), and push the hose on the pump inlet hose barb.

Install the Pump Discharge Hose:

1. Push a fish tape through the PVC service conduit from the power unit side to the lift.
2. Cut a 3/16” x 3/8” hole in the side of a 3/8” hose, 3/4” from the end of the hose.
3. Push the end of the fish tape though the hole and hook the hose on the fish tape wiring the fish tape loop closed.
4. Push and pull the 3/8” hose through the PVC service conduit. Pull enough hose though the end of the conduit to reach comfortably to a collection bucket (supplied by customer).
5. Determine how much hose you need to reach the pump discharge hose barb; cut the hose to length; push the hose on the pump discharge hose barb.

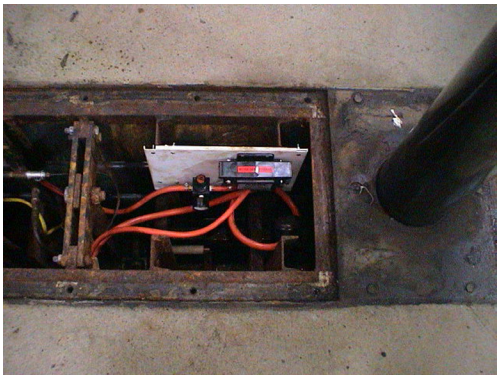

Install the Air Outlet Hose:

1. Push a fish tape through the PVC service conduit from the power unit side to the lift.
2. Cut a 3/16” x 3/8” hole in the side of a 1/4” hose, 3/4” from the end of the hose.
3. Push the end of the fish tape though the hole and hook the hose on the fish tape wiring the fish tape loop closed.
4. Push and pull the 1/4” hose through the PVC service conduit. Pull about 9 inches out the end of the conduit, enough to form a 180 degree loop outside the PVC conduit.
5. Tie the air outlet hose to the existing hydraulic hose with wire ties, looping the air outlet hose and pointing the end towards the floor.
6. Determine how much hose you need to reach the pump discharge hose barb; cut the hose to length; push the hose on the pump discharge hose barb.

Run the Pump:

1. Actuate the air lock valve and set the air pressure regulator on the panel to 30 PSI.
2. Run the pump long enough to verify that the installation is successful. Condensate should be pumped at a rate of one gallon-per-minute or greater so long as there is sufficient condensate at the bottom of the lift.

Replace the service cover. Your installation is complete.

WARNING: THIS SYSTEM IS FOR REMOVING WATER FROM A CASSETTE LIFT. DO NOT PUMP GASOLINE OR FLAMMABLE LIQUIDS OR USE WHEN FLAMMABLE VAPORS ARE PRESENT.

Read Pump Service Tips (Instructions) before attempting to service pump.

Thank you for purchasing Aqua Out!

SVI International, Inc.
155 Harvestore Drive
DeKalb, IL 60115

800-321-8173
815-748-0200

INSTALLATION & OPERATION INFORMATION FOR MODELS N5100XXX

PRODUCT DATA

Pump Design .....Duplex Diaphragm
Wetted Parts
Diaphragm Material..... Santoprene®, Viton ®, Buna, or Geolast
Check Valve Material .....Santoprene®, Viton ®, Buna, or Geolast
Housing material .....Acetal Copolymer
Ports .....Gas Inlet & Outlet 1/4" (6.3 mm) Barb
Product Inlet 3/8" (9.5 mm) Barb
Product Outlet 3/8" (9.5 mm) Barb
Net Weight .....1.10 lb. (0.5 Kg)

® A registered trade mark of Monsanto Co.
® A registered trade mark of I.E. DuPont Co.

DESCRIPTION

FLOJET Industrial N5100 Series Pumps are designed for light general commercial and industrial applications. These pumps are constructed from a selection of materials for handling a broad range of chemicals*.

NOTE: Not to be used with any Fluids with a flash point below 100˚F (38˚C).

***For Chemical Compatibality of diaphragm material please refer to the Chemical Compatibility Guide referenced in F100-227.**

STANDARD MODELS

N5100-010 .....Buna
N5100-020 .....Viton®
N5100-040 .....Santoprene®
N5100-050 .....Geolast®

PERFORMANCE SPECIFICATIONS

PUMP

Liquid Temperature Min .....40°F (4°C)
.....Max .....120°F (49°C)
Priming .....Dry .....28 ft. (8.5 m)
.....Wet .....32 ft. (9.8 m)
Flow Rates .....Max .....Up to 2.5 GPM (9.5 LPM)
Gas Supply Pressure .....20 to 80 PSI (1.4 to 5.6 bar)
Noise Level .....Max 87dB

Santoprene®, Viton ®, Buna, or Geolast Material with 1/2" Ports

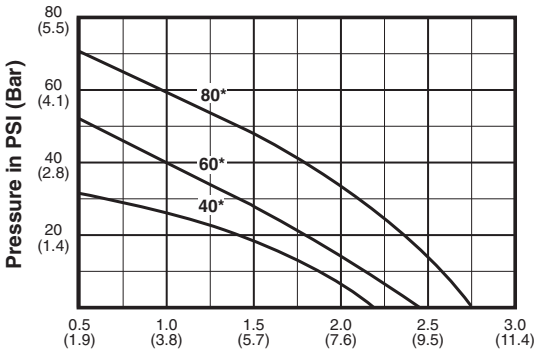

*Indicates Air Inlet Pressure in PSI

NOTE: For maximum running life do not exceed 80 PSI (5.5 bar) Gas Inlet Pressure

DIMENSIONAL DRAWING
Inches (millimeters)
Dimensional tolerances ± 0.06 inches
Consult factory if precise details are required.

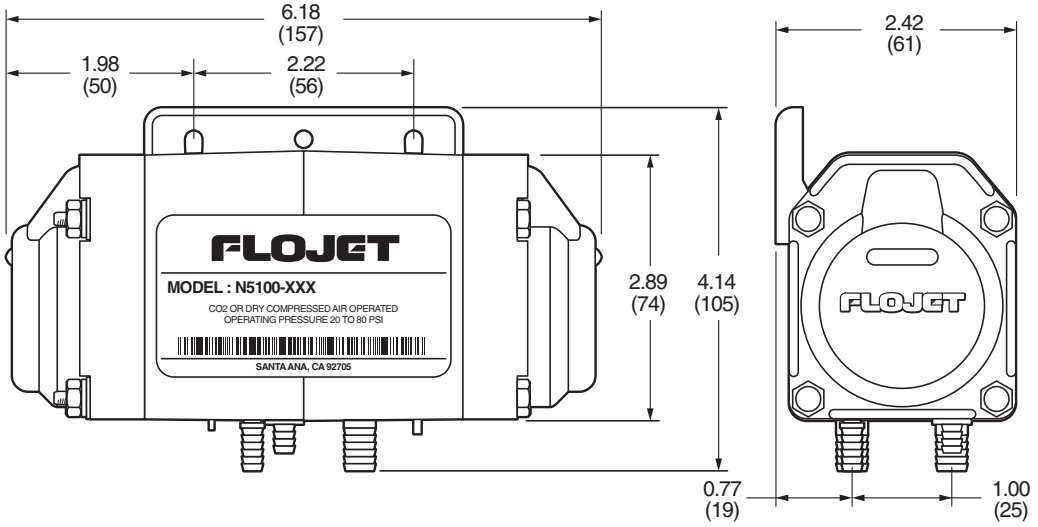

MOUNTING

The FLOJET N5100 Series self-priming pump should be mounted in a dry and adequately ventilated area. This pump can be mounted several feet from the tank, above or below the fluid level. For most applications, no more than 4 feet above the fluid level is recommended. **This is not a submersible pump.**

Secure Pump to desired fixture by screws through the mountng bracket. **Ports must be facing down.**

HOSE CONNECTIONS

Product In - Use 3/8” (10 mm), reinforced, flexible, non-collapsible hose or equivalent. Avoid sharp bends that could restrict flow or cause hose to collapse under vacuum.

Product Out - Use reinforced 3/8” (10 mm) I.D. hose for discharge tube.

Gas In - Make sure gas regulator is set at zero. Use reinforced 1/4” (6 mm) hose. connect “Gas In” to gas supply fitting on regulator. If pumps are installed in an enclosed area, it is recommended to connect a hose to the gas discharge port (exhaust) and vent gas to atmosphere. (Requires ‘small’ exhaust port)

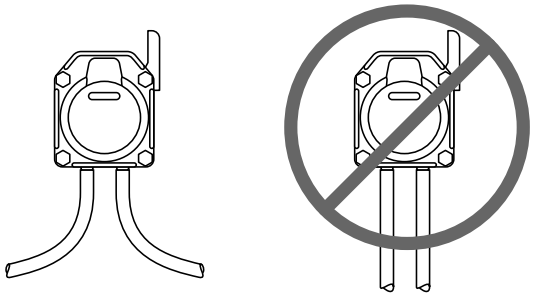

FLEXIBLE HOSE

RIGID PIPE

PLUMBING

Use a flexible hose to avoid excess stress on pump ports. DO NOT crimp or kink hose. All hose should be the same size as the pump port fittings.

All fittings must be compatible with fluid being pumped. It is recommended to use plastic fittings only.

The use of check valves in the plumbing system could interfere with the priming ability of the pump. If unavoidable, check valves in the pumping system must have a cracking pressure of 2 PSI or less.

Use a minimum 40 mesh strainer or filter in the tank or pump inlet line to keep large foreign particles out of the system.

OPERATION

At start-up, regulate gas pressure to desired setting. For most installations 20 PSI (1.4 bar) inlet will be adequate, although DO NOT go below 20 PSI (1.4 bar). Pump will operate according to air supply. Flow and pressure can be adjusted by increasing or decreasing gas pressure to accommodate varying product viscosities, length of lines or other installation conditions. Review flow curves located on page 1 for further assistance. High viscosity fluids and hose length will limit priming distance. **IF PUMP IS T0 BE USED IN HIGH FLOW, LOW PRESSURE APPLICATIONS, ADJUST GAS PRESSURE TO 20 PSI (1.4 BAR) ABOVE DISCHARGE PRESSURE.**

CONTINUOUS OPERATION AT 120°F (49°C) WILL REDUCE PUMP LIFE.

AIR MUST BE DRY AND OIL FREE.

Compressors must have dryers and/or a water separator in the air distribution system. Pumps that fail due to water in the air chamber will not be covered under the limited warranty.

GENERAL SAFETY INFORMATION

Protect yourself and others by observing all safety information. Follow all safety codes and the Occupational Safety and Health Act (OSHA).

WARNING

DO NOT PUMP GASOLINE OR FLAMMABLE LIQUIDS OR USE WHERE FLAMMABLE VAPORS ARE PRESENT.

If used with $C0_2$ or N_2 be sure the area is well ventilated.

CAUTION:

Do not clean or service FLOJET pumps, hoses or valves while the system is pressurized. Plastic CO_2 air inlet ports do not have a check valve. Prior to cleaning or servicing, purge the pump by carefully tilting the pump so ports are facing up and remove suction line from source. Turn air off and disconnect air inlet line. (Brass air inlet ports have a check valve.)

PREVENTIVE MAINTENANCE TIPS

Tips to help prolong your pump’s life.

- If pumping liquid other than water. pump should be flushed with water (if applicable) after every use.
- Before freezing conditions occur, pump must be liquid free.
- If mounting pump in an outdoor environment. shield pump from environmental extremes (i.e. sunlight. water from washdown spray, rain, etc.).
- When using an air compressor, use an inline air dryer placed before the pump to limit water build-up.

MODEL N5100 SERIES EXPLODED VIEW

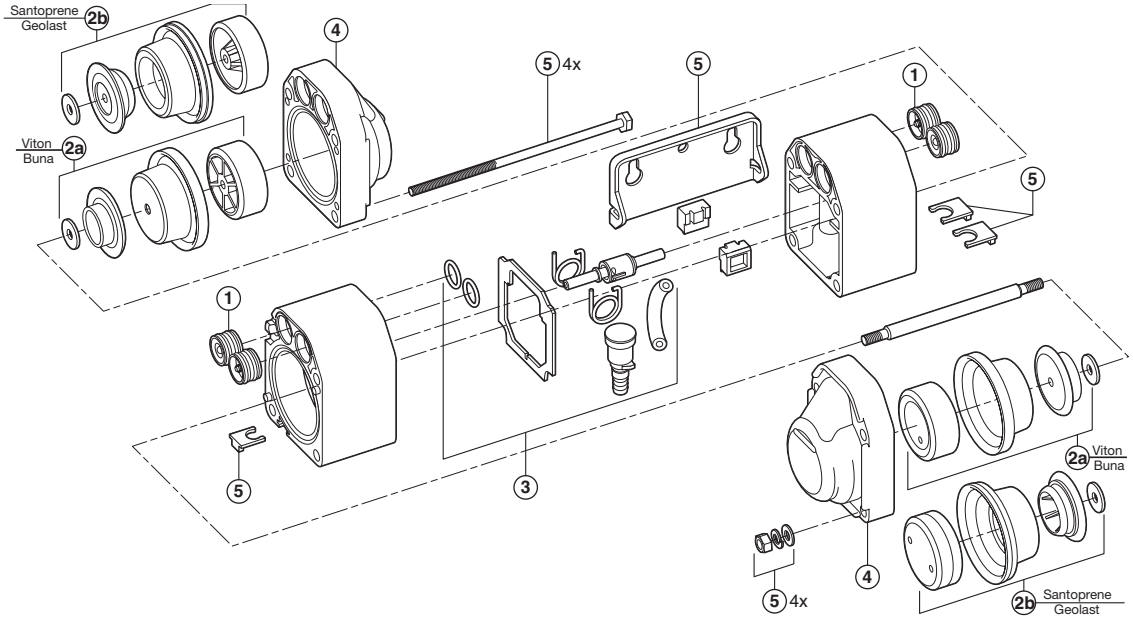

Key	Part No.	Description	Qty
1	20467-005	Kit, Check Valve Assembly, Buna	4
	20467-006	Kit, Check Valve Assembly, Viton®	4
	20467-007	Kit, Check Valve Assembly, Santo®	4
	20467-008	Kit, Check Valve Assembly, Geolast	4
2a	20466-005	Kit, Diaphragm (incl. Pistons), Buna	2
	20466-006	Kit, Diaphragm (incl. Pistons), Viton®	2
2b	20466-007	Kit, Diaphragm (incl. Pistons), Santo®	2
	20466-008	Kit, Diaphragm (incl. Pistons), Geolast	2

Key	Part No.	Description	Qty
3	20469-005	Kit, Spool Valve & Springs, Buna	1
	20469-006	Kit, Spool Valve & Springs, Viton®	1
	20469-007	Kit, Spool Valve & Springs, EPDM	1
	20469-008	Kit, Spool Valve & Springs, Geolast	1
4	20468-005	Kit, End Caps	2
5	20465-001	Kit, Hardware	1

****For optional port fittings, see F100-112****

DISASSEMBLY PROCEDURE

Remove all gas lines and suction/discharge fittings from pump. This is accomplished by using a flatbladed screwdriver. Slide the retaining clips away from the gas "in," suction and discharge fittings. Then pull the fitting away from pump body.

Using a 5/16" (8 mm) socket, remove the 4 nuts and washers and pull out the body bolts.

The end caps, mounting brackets will separate from the pump. Grab a piston in each hand and twist each side counterclockwise. Remove the piston, diaphragm, piston seal and retaining washer from one side of the drive shaft.

Place drive shaft into a vise with wood block jaws and rotate counterclockwise to release old diaphragm. Install new diaphragm and hand tighten.

CAUTION: Do not damage the surface of the drive shaft.

Using a razor blade or sharp knife, cut label on the front of the pump along the seam in center of body.

With pump label facing you, slowly pull body apart. Disconnect exhaust hose from muffler and pull spool valve stem from body. Discard body gasket and old spool valve subassembly.

To assemble new spool valve subassembly, insert internal exhaust hose spring into exhaust hose. Connect hose to spool valve. Mount torsion springs into spool valve straight side first. Push torsion springs through spool valve to bent/hook end. Lubricate spool valve stem and insert stem into left side of pump body making sure torsion springs are positioned in retaining niches. Carefully push spool valve into pump until torsion springs snap inward and lock into place. Reconnect exhaust hose to muffler fitting.

CAUTION: If exhaust hose is not reconnected to muffler fitting, pump will not operate.

Position new body gasket and the two o-rings and press pump body together. Reinsert gas "in" fitting, discharge and suction fitting into pump and slide retainer clips over fittings until they snap into place. This will help hold the pump together during assembly.

Lubricate and carefully reinsert the drive shaft through the pump body. Install new diaphragm and piston assembly onto drive shaft and hand tighten. Note positioning and direction each part is facing.

Position end caps onto pump body. Insert body bolts through pump body. Install washer, split washer and hex nut on each bolt.

Note: Remember to insert mounting bracket into niches on the body before installing end caps and bolts.

With a 5/16" (8 mm) nut driver, alternately tighten each body bolt maintaining even pressure around pump body. Using a 5/16" (8 mm) torque wrench tighten body bolts to 20 inch lbs.

TROUBLESHOOTING CHART

Symptom	Possible Cause(s)	Corrective Action
Pump will Pump will not start (stalls)	1. Inadequate air supply (20 PSI Min.) 2. Contaminated air supply 3. Ruptured diaphragm (2) 4. Check spool valve for wear	1. Increase air inlet pressure 2. An air dryer might be required 3. Replace diaphragm (2) 4. Replace spool valve if necessary
Pump runs, but no fluid	1. A leak or break in the product inlet line 2. A leak or break in the product discharge line	1. Replace product line 2. Replace product line
Pump leaks through exhaust port	1. Leak at upper exhaust port o-ring 2. Inadequate slide lubrication	1. Replace exhaust port 2. Replace with spool valve kit
Flow rate is low	1. Tubing or hose is damaged or blocked 2. Check viscosity of medium being pumped 3. Check valves not seated correctly (1)	1. Clean or replace 2. Reduce viscosity of medium, increase hose diameter or contact factory for recommendation 3. Reinstall check valves (1)
Pump leaks	1. Ruptured or worn out diaphragm (2) 2. Pump housing screws not torqued adequately	1. Replace diaphragm (2) 2. Torque screws to 20 in lb